datasheet

ELMA
Your Solution Partner

ELMA LED-Display

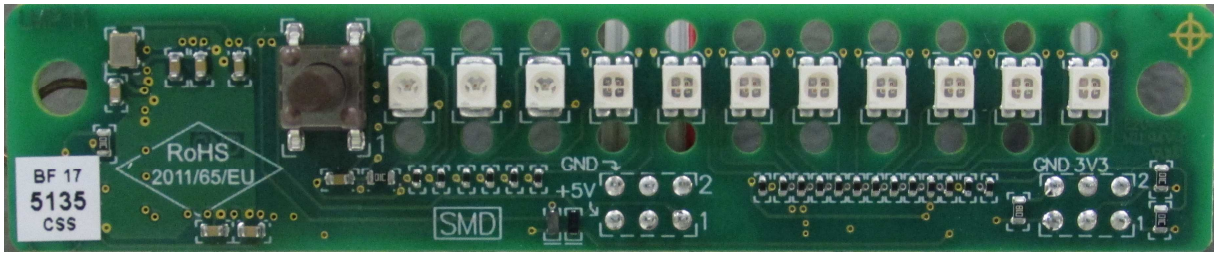

Overview / Description

The LED-Display supports both single color (on-off) and multi-color LEDs.

The Led Display has 11 LEDs and 1 push button that can be used to generate a SYSRESET*.
The 11 LEDs are instantiated as 11 compact SDRs. To use any of the LEDs, it's SDR has to be present in the SDR Records loaded in the System Monitor.

LEDs 1 to 8 are multi-color LEDs and can emit green, red or amber light, while LEDs 9-11 are single color LEDs and can only emit yellow light.

The System Monitor allows it's users to assign a particular LED to any of the available internal events: infringement for any of the 6 thresholds for threshold type sensors / active level for discrete sensors.

The way the LEDs behave is defined in the next table.

Led Type	Driver State	
	Inactive	**Active**
Single color	Off	On
Multi-color	Green	Red / Amber

For single color LEDs, only LED On state can be triggered by System Monitor's internal events.
For multi-color LEDs, the user can also choose which color (red, amber) will be emitted when the driver becomes active.

***Note:** This feature was designed to support signaling multiple thresholds infringements for the same sensor / group of sensors. In this case the led can be used as follows:

Green light - sensor is ok
Amber light – non-critical event
Red light – critical event

Keeping this application in mind, when a led will have both amber and red drivers active, the red ones will win the arbitration process.

The LEDs can have multiple **threshold** sensors assigned as drivers. The transfer function for the LED is OR on all its drivers.

****Note:** When considering multiple **discrete** drivers for a LED, it is better to assign those drivers to an output and then assign that output to drive the led.
This type of assignment is recommended because events for discrete sensors are generated only on the signal's edges and LEDs track all edges without checking which signal they belong to.
It is better to use an output to track multiple discrete drivers because outputs perform logical AND or OR functions.

*****NOTE:** At power-up all LEDs that have SDRs loaded will be initialized. After that the **unused LEDs will be turned off**.

The sensor numbers for the LED-Display LEDs can be found in the System Monitor User Manual in paragraph "2.2 Sensor Numbers".
The status of all the available LEDs can be checked using "led"-command.
For more details about assigning a LED to a particular internal event see paragraph "5.7.9. Changing the led assigned to a sensor event".

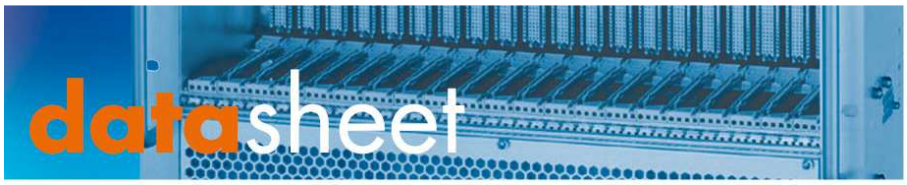

ELMA
Your Solution Partner

Technical data

Power supply	+5V DC
Current consumption	40mA max.
Operating temperature	0°C to +70°C
Storage temperature	-40°C to +85°C
Humidity	95%, non-condensing
Physical dimensions	91.44 x 19.05mm
Interface	I2C

Dimensions

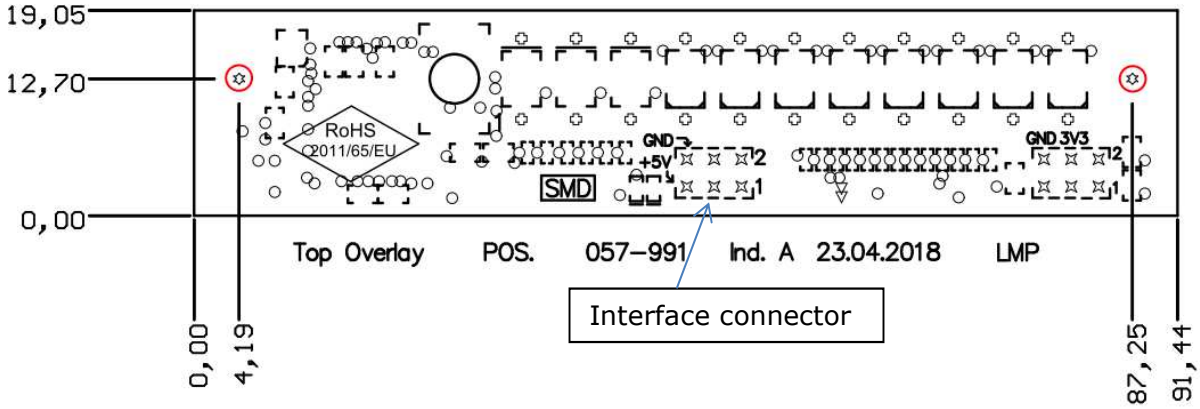

Mounting holes: 4.1mm

LED assignment

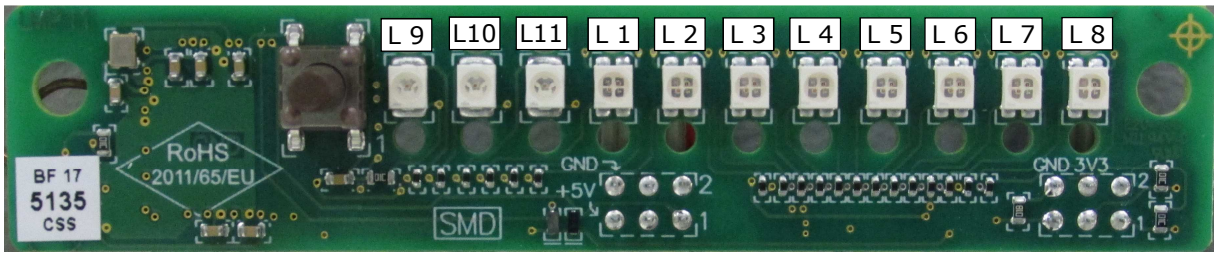

6 pin IDC connector interface connector

Pin	Description
1	SDA
2	SCL
3	Reset-signal
4	NC
5	+5V
6	GND

Order numbers

Order number	Description
060-013 (old 024-927)	LED-Display complete with 0.8m cable, mating connector and light pipes (front plate not include in delivery)
057-989 (old 025-384)	LED-Display with 0.8m cable without mating connector and light pipes (front plate not include in delivery)

Elma Electronic GmbH
Stuttgarter Str. 11
75179 Pforzheim, Germany
Tel. +49 7231 97 34 0
Fax +49 7231 97 34 97
info@elma.de